QZX

The Journal Covering Amateur Radio and Sinclair Computers
ZX80; Micro-Ace; ZX81; TS1000, 1500, and 2068; QL; Z88
Alex. F. Burr, K5XY, Publisher
2025 O'Donnell Drive
Las Cruces, NM
88001

Volume 11 Number 5 ($1.50 / issue) 1993 APRIL

* EDITOR'S NOTES K5XY
* UNCLASSIFIED ADS
* QL IN EUROPE K5XY
* BITS AND BYTES
* TS2068 FUNCTIONAL DIAGRAMS

EDITOR'S NOTES

K5XY

There is a special reason that I made a big effort to get this issue in the mail in the appropriate month for the first time in quite a while. You will note that this is the April issue and that it should have gotten to you about the first (even if it really did not).

I have just been told that one of the workers in the University computer center just died. It seems that he got bit by a byte. It would not have been so bad, but he was bit in the ROM and it affected his BIOS.

The users of Sinclair computers are really slowly going down in numbers. The latest indication of this fact comes from Computer Monthly, a magazine which used to carry a Sinclair column. The writer of that column has abandoned the Sinclair and is now writing about MSDOS computers. He is obviously new to that type of machine because he got his paragraph on the history of MSDOS CPU's mixed up. The rest of his advice to new and prospective MSDOS users was reasonable however.

One should not get too pessimistic. WA6DLI, Bob, sent me some information from Europe on a whole list of QL equipment. A summary appears as an article in this issue.

Bob also included a commercial post card with a very distinctive computer drawing on it. The card said the illustration was of a fractal image generated on a super computer. However the object shown was not what most people would call a fractal. It was a phase plot of a strange attractor. But it was pretty.

UNCLASSIFIED ADS

WANTED: UNCLASSIFIED ADS for publication in QZX. Cost is 1 cent for each keystroke (characters, blanks, etc.). Payment must be included with order. This is an excellent way to sell your program or unwanted equipment, ask for help, or find a specific program. Send your ad with payment to QZX, 2025 O'Donnell, Las Cruces, NM 88001.

FOR SALE: Recycled holes. I have many holes from the spocket strips torn off pages used to print QZX. It is a shame to waste them so I have packaged them in boxes of 10,000. Sprinkle them on pillow cases to make mosquito netting. They are also good for trail snacks if salted lightly. Free ($1.00 postage and handling.) A. F. Burr, 2025 O'Donnell, Las Cruces, NM 88001.

FOR SALE: Back issues of QZX, $1.00 each postpaid. QZX, 2025 O'Donnell, Las Cruces, NM 88001.

FREE..RAM chips, 2114 for the RAM add-on in the July 1992 issue of QZX. Please send postage and mention the number of chips you want. Bo Barry, W4GHV, 8118 Kensington Lane, Harrisburg, NC 28075.

FOR SALE: Back issues of QZX, $1.00 each postpaid. QZX, 2025 O'Donnell, Las Cruces, NM 88001.

WANTED: Votem analog interface for Timex/Sinclair including manual. Edward L. Radtke, 1602 Woodluck Ave., Lou. KY 40205, 502-458-7324.

FOR SALE PC-DRAW a printed circuit designer for the TS2068. See review in QZX for 1988 May. $9.00 postpaid. A. F. Burr, 2025 O'Donnell, Las Cruces, NM 88001.

FOR SALE: CP/M books. Almost new. Half original price. *The Programmer's CP/M Handbook* by Andy Johnson-Laird. Osborne. Hardback. 500 pages $419. *The Byte Guide to CP/M* by Mark Dahmke. Mc Graw Hill. 250 pages. $8.50. *CP/M Users Guide* by Thom Hogan. Osborne. 330 pages. $8.95. *The CP/M Plus Handbook* by Alan R. Miller. Sybex. 250 pages. $7.5. *Inside CP/M Plus* by David E. Cortesi. Holt-Rinehart. 260 pages. $9.25. *CP/M Bible* by Waite and Angermeyer. Howard Sams. 430 pages. $9.90. *Users Guide to CP/M Systems* by Bove and Rhodes. Baen. 300 pages. $4.50. $1.00 each shipping and handling. A. F. Burr, 2025 O'Donnell, Las Cruces, NM 88001.

ProFile +5
Data Base

If you are using a 2068 and have been looking for the BEST data base program for keeping track of all the data you need at hand, ProFile +5 is for you!

Some key features:

* OPEN FORMAT * PRINTER FORMATTING
* FILE DATING * FAST MC SORTING
* MATH FUNCTIONS * PRINT 64 COLUMNS
* SPECTRUM COMPATIBLE * EASY-TO-USE

ONLY $20.00 + $4 SH

RMG ENTERPRISES
1419-1/2 7th Street
Oregon City, OR 97045-2030

503/655-7484 FAX: 503/655-4116

QL in Europe

K5XY

WA6DLI, Bob, sent me some interesting information about QL hardware and software available in Europe. It seems that there is still enough interest to support an active QL industry. The information mentioned a trade show held in Holland just for the QL.

The main items which he sent me described what appeared to me to be essentially a new case for the QL with a greatly expanded power supple and lots of room inside for floppy disk drives and hard drives too.

It was called the QL-2000 and was basically a QL board with as many add-ons as you wanted. It was even available as a kit with only a little soldering and assembly required.

It was a bit difficult to determine exactly what was or was not included in the various configurations mentioned, but the prices ranged from $252 for a bare bones kit containing the computer board, a foot high mini tower case, and a 200 watt power supply.

A completely assembled machine with a fancy keyboard, at least one floppy drive, a 20 MB hard disk, and a gold card with 2MB of RAM cost almost $1600. This model did not have the microdrives with which the usual QL comes. Neither was a monitor included at this price.

There were a number of things which caught my attention. One was the 200 watt power supply. The QL usually comes with a 20 watt line cord power supply so this one would be hard to overload. (See a coming issue for a more complete description of the usual QL power supply.)

Also for sale (and designed for the QL) were scanners, digitizers, and bar code readers. In general prices were higher than equivalent equipment here. Floppy disk drives were just under $100 (where it is easy to get them here for $50 to $75). MSDOS emulation programs cost $80 and up. Hard disks were particularly expensive. A 120 MB hard drive would cost about $700. (I just bought a 200 MB one for less than $500.)

Software was a bit cheaper in general. A high end word processor might cost $150, but a typing tutoring program only $12.

If you think the sales tax in your state is high, you should have to pay the European sales tax (called VAT for value added tax). There it is 15%.

But at least here is a group of people working hard to expand our computing systems.

QZX INDEX ORDER BLANK

Please send a QZX INDEX to

Name _____
Address1 _____
Address2 _____
City _____
ST__ Zip _____-____

Enclosed is $9.00 plus $1.00 for shipping and handling for each.

BITS AND BYTES

194 To adjust the delay between repeats on the TS2068 enter POKE 23562,X where X will be on the order of 1 to 5.

195 Some people get confused by the SAVE message "Start tape then press Enter". On the TS2068 you just need to POKE 26689,38 to start saving immediately.

196 Have you ever had a program that loads on the TS2068 in several parts off of tape that gave you the following trouble? You have the loader program, then a pretty screen presentation, followed by the loading of the main program overprinting the screen and giving an unaesthetic look? To get rid of this problem, do the following in the loader program: POKE 23570,16 and in the main program you can restore by using POKE 23570,6. If you do not restore by the second POKE then PRINT and LIST will be corrupted in your program.

197 If you want your TS2068 INPUT statements to treat caps the same as lower case try changing the mode of the computer. POKE 23658,8 gives uppercase mode, 23658,0 gives lower case mode, 23617,2 gives graphic mode, and 23617,1 gives extended mode.

198 For contrasting color on the TS2068 between ink or paper on the screen try INK 9 or PAPER 9.

199 To get a line 0 in a listing on the TS2068, try POKE 26711,0. To change line 0 to line 1, try POKE 26711,1.

200 On the TS2068 to send all data that is normally headed for the screen to the printer, use OPEN #2. To cancel the redirection, enter CLOSE #2.

201 You can save RAM by some programing tricks. The following three lines produce exactly the same results.

```
RANDOMIZE USR 100
RANDOMIZE USE VAL "100"
RANDOMIZE USE CODE "d"
```

The second line saves about 3 bytes and the third line saves two more.

202 Here is a small TS2068 screen saver program.It saves a screen display at address 57000 and recalls it on demand.

```
1 REM Screen Save Routine
5 Data 33,0,64,17,168,222,1,0,27,
237,176,201
10 Data 33,168,222,17,0,64,1,0,27,
237,176,201
20 FOR I =65300 to 65323: READ
A: POKE 1,A: NEXT I
30 STOP
SAVE "SCRSAV" CODE 65300,24
```

Once the code is POKEd you use the following calls to store and recall the screen.

Store: RAND USR 65300

Recall: RAND USR 65312

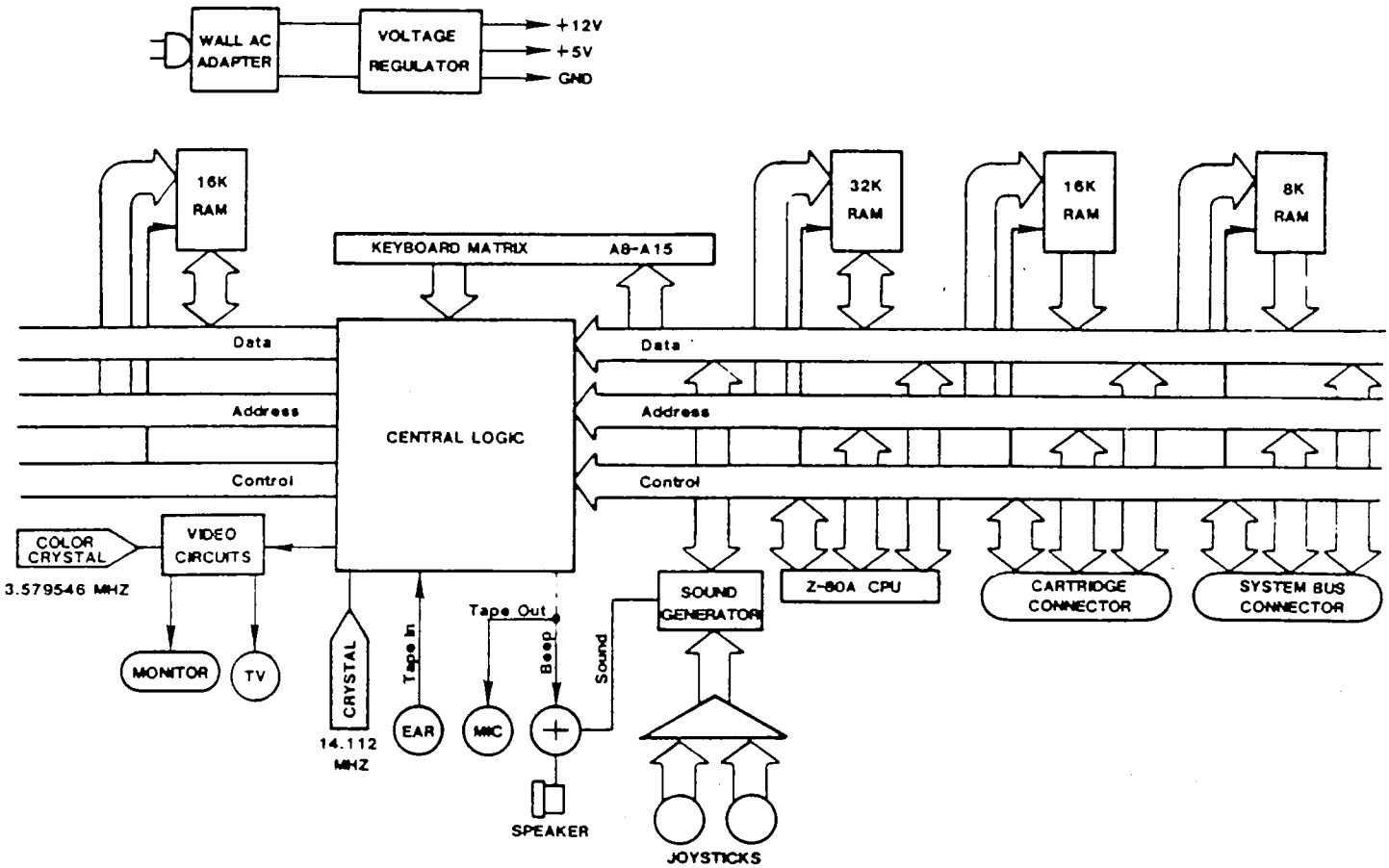

Figure 1. TS 2068 BLOCK DIAGRAM

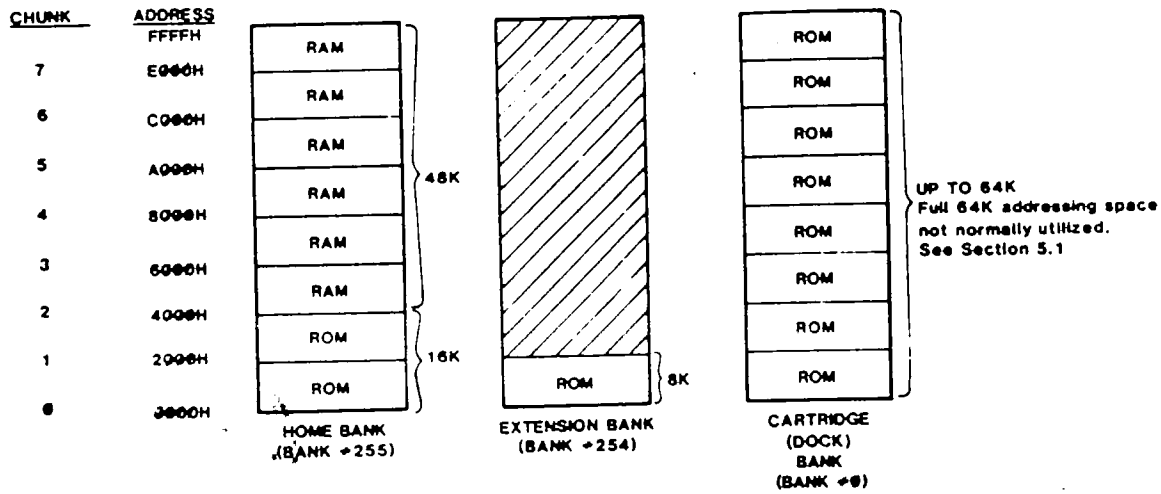

Figure 2. TS 2068 STANDARD MEMORY CONFIGURATION

73, K5XY

QZX presents the best software and hardware projects available for the radio amateur. While the contents are believed to be accurate, no warranty is extended on any program or project. No investigation has been made of the claims or reputation of any advertiser. It would be greatly appreciated if all correspondence requiring an answer would be accompanied by a self-addressed stamped envelope (SASE). Copyright by QZX, 1993. All rights reserved, photocopying by permission only
ISSN 1055-1735

Please send me QZX for one year, starting immediately. Enclosed is $15.00 for twelve issues. (Those with addresses not in Canada, the US, or Mexico send $25.00 in US funds for air mail delivery.) Thanks. (93/4)

Name _____

Call _____

Address _____

City _____

State ____ Zip _____

Country _____

QZX Journal
2025 O'Donnell Drive
Las Cruces, NM 88001

LAS CRUCES, NM 88
PM
30 APR
1993

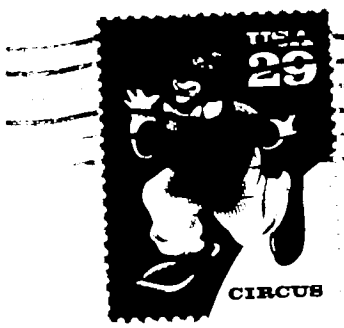

FIRST CLASS

W*6AND
PAUL ANDERSON
4346 Charger Blvd
San Diago, CA 92117

93/08

92117-4241 47